NCJXT00310A01-A

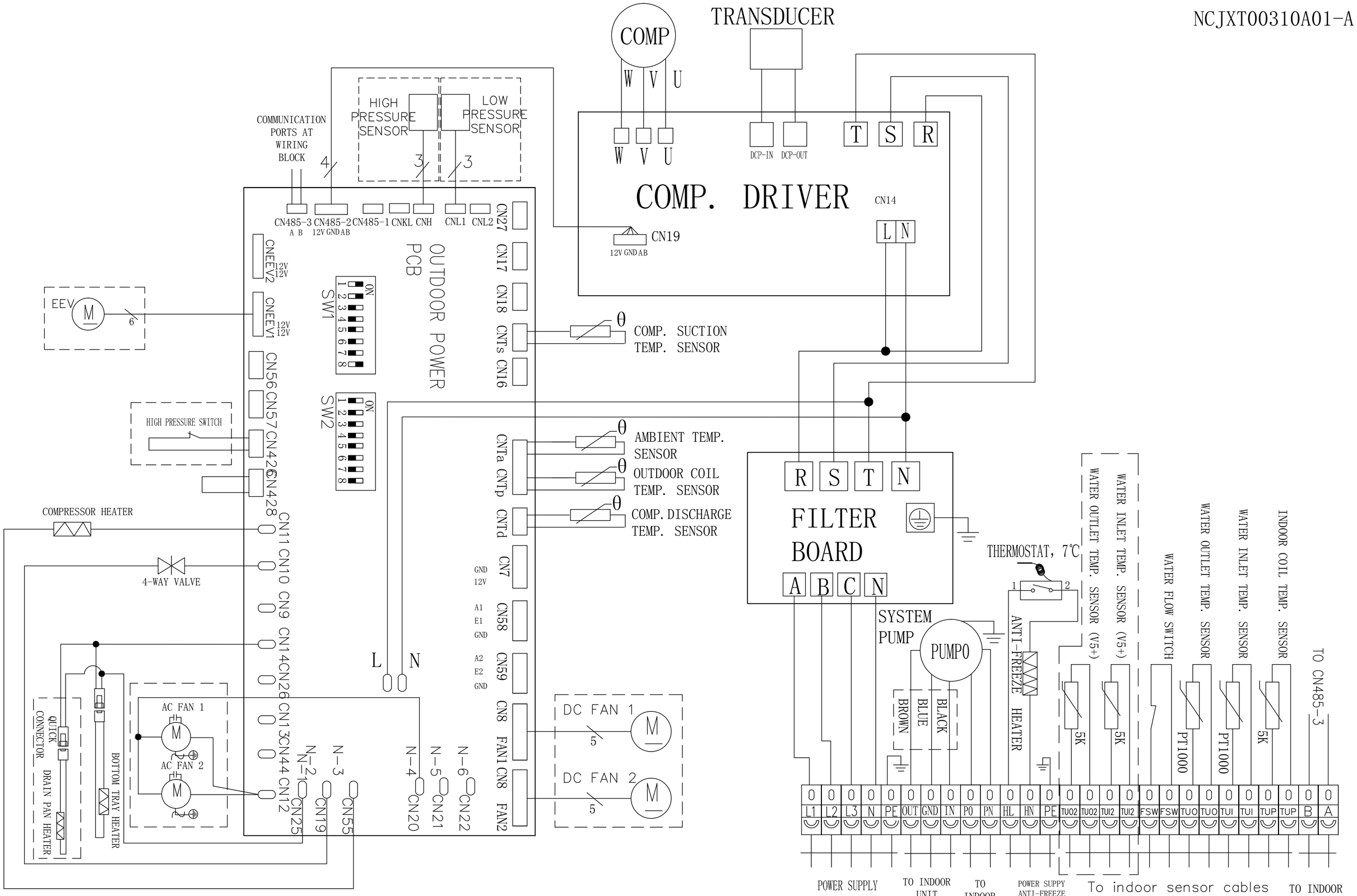

NOTE: PARTS IN DOTTED LINES ARE FOR SOME SPECIFIC MODELS.