WIRING DIAGRAM

NCJXT00335A01-B

1、MV1&MV2
MV1: Mixing valve for Heating/cooling circuit 1,24V DC power, 0~10V signal.
MV2: Mixing valve for Heating/cooling circuit 2,24V DC power, 0~10V signal.
2、Communication cable for Modbus between PCB and operation panel:
A to NO.9; B to NO.8
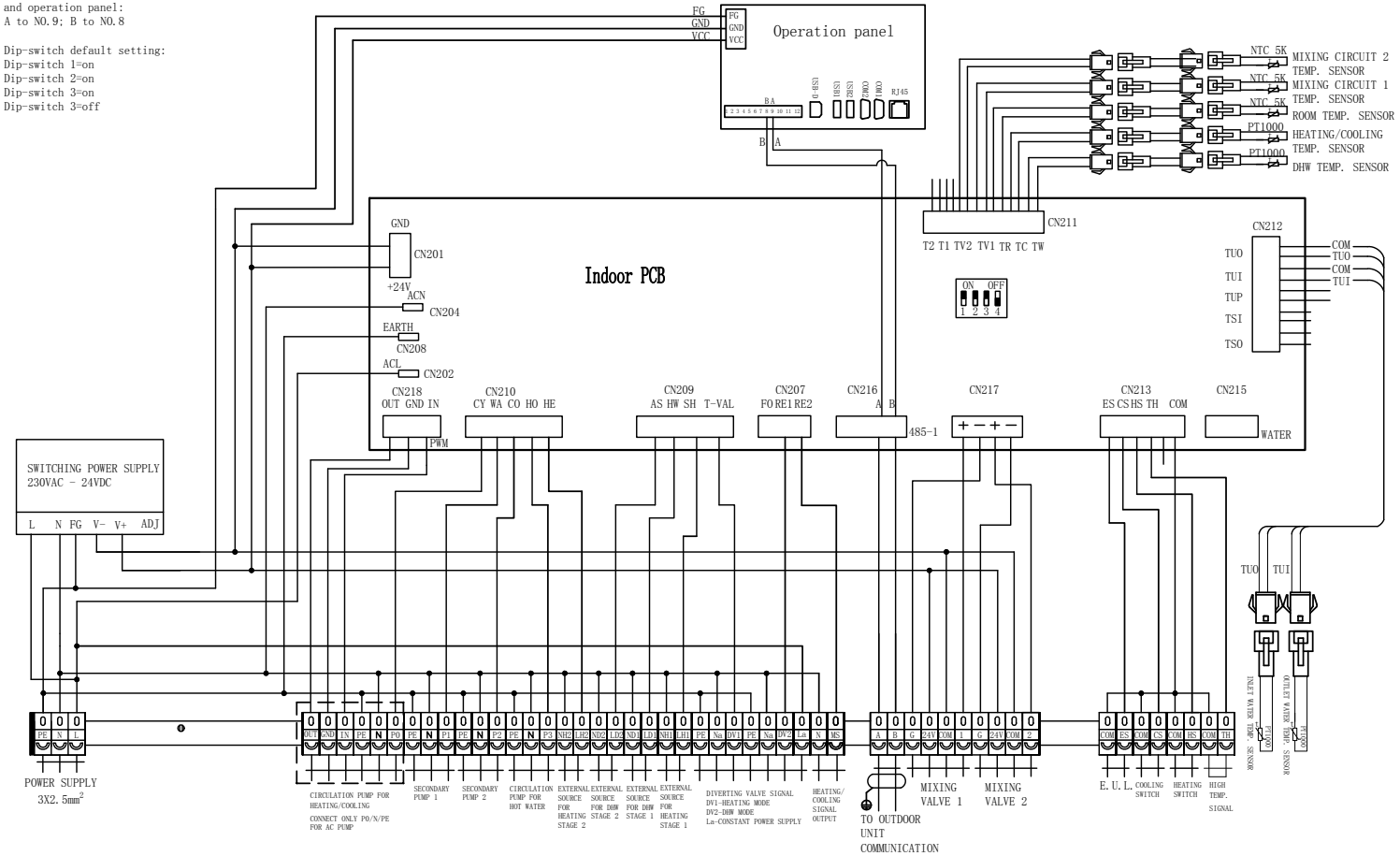
Dip-switch default setting:
Dip-switch 1=on
Dip-switch 2=on
Dip-switch 3=on
Dip-switch 3=off