CAD/CAE Center
Format: A3

Risba je last Energy Save AB. Vsaka zloraba te risbe, razmnoževanje, prodaja tretji osebi ali uporaba v drugačne namene kot je bilo dogovorjeno, je prepovedana!

Diese Zeichnung ist Energy Save AB. Eigentum! Jegliche mißbrauch so wie Verkauf an andere Personen, jegliche Änderung der Zeichnung oder Benutzung der Zeichnung für andere mit Gorenje nicht abgesprochenen Projekte ist streng verboten!

This drawing is the property of Energy Save AB, and must not, without our consent be copied, handed to other persons or otherwise misused!

Legend:

- HP Flow
- HP Return
- HC Flow
- HC Return
- Domestic hot water
- Domestic water
- Refrigerant tube
- El. cable

Graphic symbol

- Shut-off valve
- Shut-off valve with check valve
- Shut-off valve with drainage
- Check valve
- Shut-off valve with drainage
- Temperature regulating valve (30-60°C
- Three-way diverting valve
- Three-way mixing valve
- Safety valve combination
- Heat consumer
- Circulating pump
- Flexible pipe
- Thermometer
- Pressure regulator
- Flow switch
- Filter
- Overflow valve
- Temperature sensor
- Air vent
- Manometer
- Runoff to the sewer system
- Two-way valve
- 4 way diverting valve
- Magnetic filter

EV1/2 Expansion vessel heating system
EV3 Expasnion vessel DHW system
MV1/2 Propotional mixing actuator
24VDC / 0-10V
SELTRON PROMIX AVC10Y
ESBE ARA 639

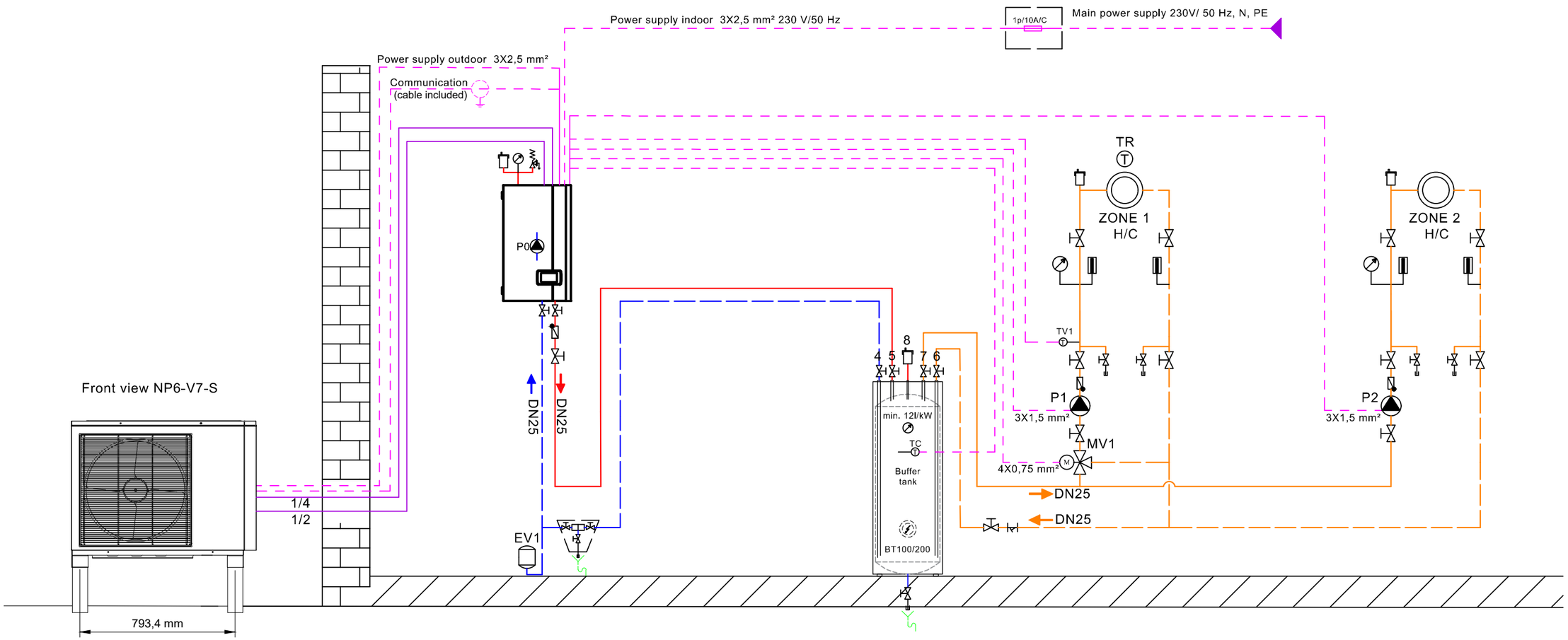

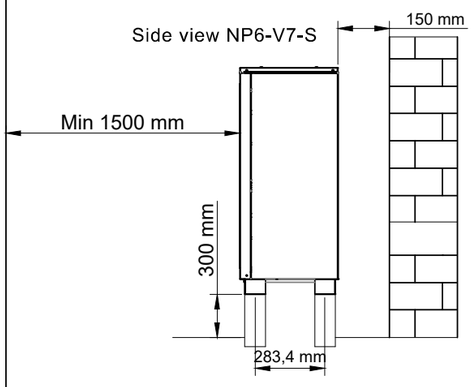

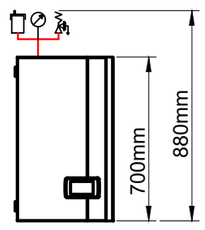

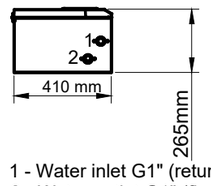

1 - Water inlet G1" (return line)
2 - Water outlet G1" (flow line)

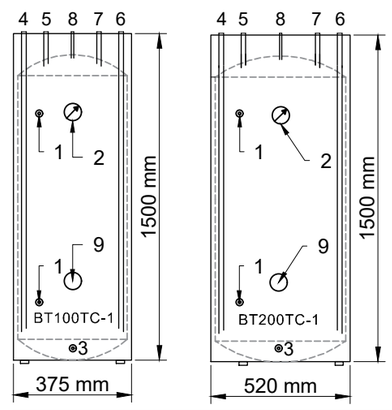

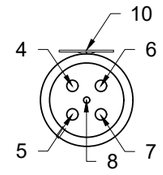

1 - Sensor
2 - Thermometer
3 - Drainage G3/4 "
4 - Connector (depth 1310 mm) G1"
5 - Connector G1"
6 - Connector (depth 1310 mm) G1"
7 - Connector G1"
8 - Connector for purging G3/4"
9 - Connector for el. heater G2"
10 - Wall bracket BT100TC-1

Classification of the Drawing/Klassifizierung/Klasifikacija risbe:		Date, Datum : 21.2.2020
E|S	Title/Titel: NPH6-V7-S, buffer BT100TC-1/200TC-1, 1 x mixing heating / cooling circuit, 1 x direct heating / cooling circ.	Drawing ID/Zeichnungs ID/ Oznaka risbe: **Ver1**
	Naziv:	Revision/Prüfung/Revizija: MK